ISS.	DATE	E.C.N.	DESCRIPTION
1	19-Jun-09		FIRST ISSUE

© 2008 CARCLO

ALL DIMENSIONS IN mm

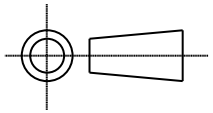

CUSTOMER DRAWING

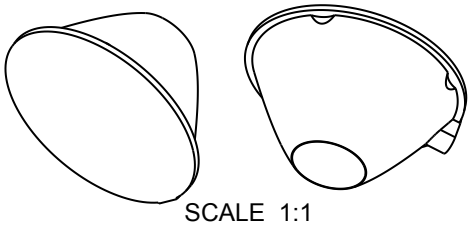

SCALE 1:1
GENERAL VIEW

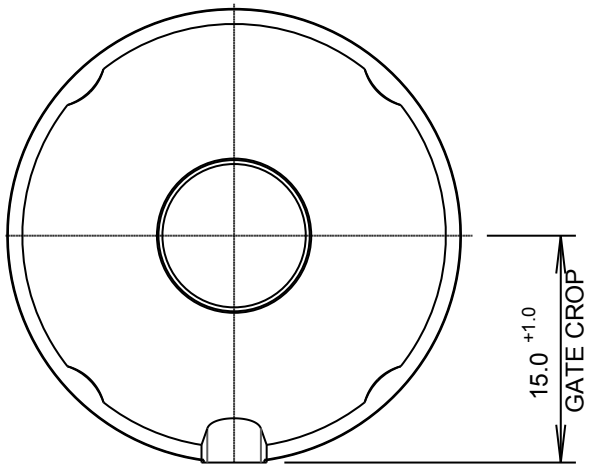

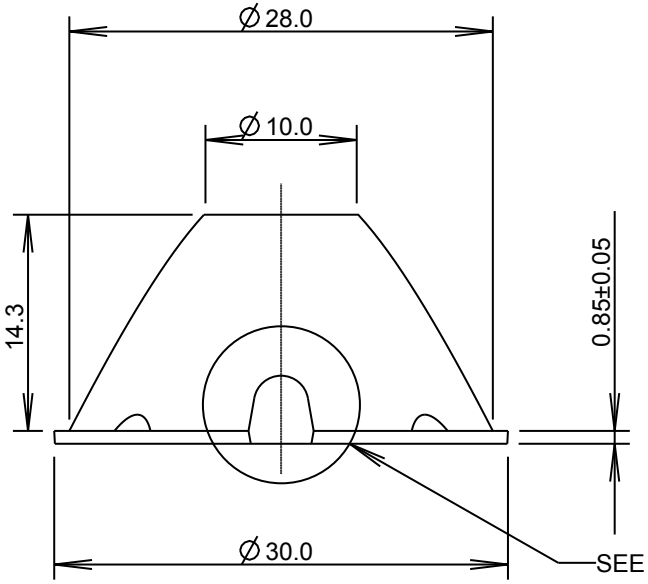

DETAIL A
SCALE 5:1

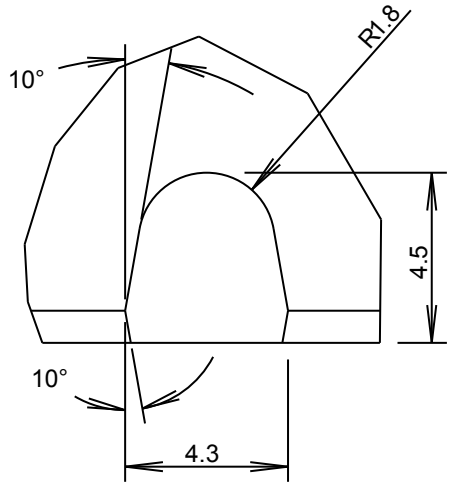

MATERIAL: POLYCARBONATE

PART NO.	DESCRIPTION
10755	PLAIN FRONT
10756	NARROW FROSTED
10757	MEDIUM FROSTED

carclo technical plastics

CARCLO TECHNICAL PLASTICS (SLOUGH) LTD.
111 BUCKINGHAM AVE, SLOUGH
SL1 4PF, ENGLAND
TEL: +44 1753 575011 FAX: +44 1753 811359
e-mail: design@ctpcoil.co.uk}

GENERAL TOLERANCES (UNLESS STATED)

LINEAR		ANGULAR	
X	+/- 0.25	X	+/- 1°
X.X	+/- 0.1	X.X	+/- 0.5°
X.XX	+/- 0.05	X.XX	+/- 0.1°

CUSTOMER: CARCLO

TITLE: 30 mm OPTIC 0.6mm OFFSET PLAIN & FROSTED

DRAWN: MKI DATE: 19-Jun-09

CHK'D DATE

APP'D DATE

SCALE: 2:1

COIL PART No.: SEE TABLE

SIZE: A4

COIL DRG. No.: 60578

SHEET: 1 OF 1