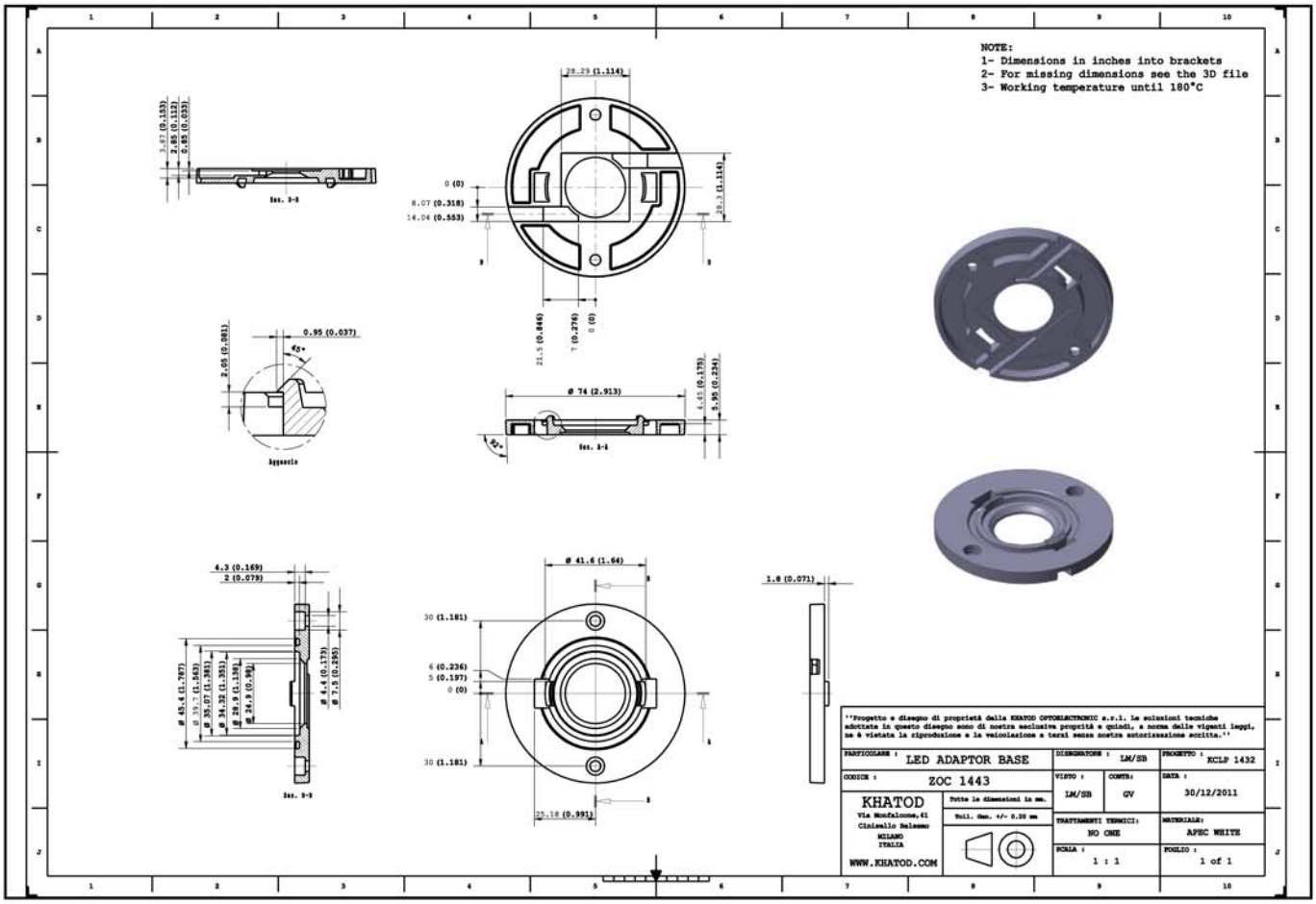23. ZOCxxxx Drawing