Enabling the Best lm/W in Mid Power Range

Mid-Power LED - 5630 Series

S1W0-5630XX8003-00000000-00004

(Cool, Neutral, Warm)

RoHS

Product Brief

Description

- This White Colored surface-mount LED comes in standard package dimension. Package Size: 5.6x3.0x0.65mm
- It has a substrate made up of a molded plastic reflector sitting on top of a lead frame.
- The die is attached within the reflector cavity and the cavity is encapsulated by silicone.
- The package design coupled with careful selection of component materials allow these products to perform with high reliability.

Features and Benefits

- Market Standard 5630 Package Size
- High Color Quality, CRI Min. 80
- ANSI & MacAdam 3 Step compliant
- RoHS compliant

Key Applications

- Interior lighting
- General lighting
- Indoor and outdoor displays
- Architectural / Decorative lighting

Table 1. Product Selection Table

Reference Code	Color	Nominal CCT	Part Number	CRI Min
S1W0-5630XX8003-00000000-00004	Cool White	6500K	**S1W0-5630658003-00000000-00004**	80
		5700K	**S1W0-5630578003-00000000-00004**	
		5000K	**S1W0-5630508003-00000000-00004**	
	Neutral White	4000K	**S1W0-5630408003-00000000-00004**	
	Warm White	3500K	**S1W0-5630358003-00000000-00004**	
		3000K	**S1W0-5630308003-00000000-00004**	
		2700K	**S1W0-5630278003-00000000-00004**	

Table of Contents

Index

•	Product Brief	1
•	Table of Contents	2
•	Performance Characteristics	3
•	Characteristics Graph	5
•	Color Bin Structure	12
•	Mechanical Dimensions	15
•	Recommended Solder Pad	16
•	Reflow Soldering Characteristics	17
•	Emitter Tape & Reel Packaging	18
•	Product Nomenclature	20
•	Handling of Silicone Resin for LEDs	21
•	Precaution For Use	22
•	Company Information	25

Performance Characteristics

Table 2. Electro Optical Characteristics, I_F =65mA, T_j=25ºC, RH30%

Min. CRI, Ra[4]	Normal CCT (K) [1]	Min. Flux [lm] @65mA	Typ. Luminous Flux Φ_V[3] [lm] @65mA	Typ. Luminous Efficacy [lm/W] @65mA	Part Number
80	6500	33.5	35.7	197.5	S1W0-5630658003-00000000-00004
	5600	35.0	36.0	199.2	S1W0-5630578003-00000000-00004
	5000	35.0	36.6	202.8	S1W0-5630508003-00000000-00004
	4000	35.6	36.6	202.5	S1W0-5630408003-00000000-00004
	3500	34.4	35.3	195.4	S1W0-5630358003-00000000-00004
	3000	34.4	35.0	193.6	S1W0-5630308003-00000000-00004
	2700	32.8	34.7	191.9	S1W0-5630278003-00000000-00004

Notes :

(1) Correlated Color Temperature is derived from the CIE 1931 Chromaticity diagram.

(2) Seoul Semiconductor maintains a tolerance of ±5% on Intensity and power measurements.
The luminous intensity IV was measured at the peak of the spatial pattern which may not be aligned with the mechanical axis of the LED package.

(3) The lumen table is only for reference.

(4) Solid angle 0.01sr (reference)

Performance Characteristics

Table 3. Characteristics, I_F=65mA, T_j= 25ºC, RH30%

Parameter	Symbol	Value			Unit
		Min.	Typ.	Max.	
Forward Current	I_F	-	65	-	mA
Forward Voltage	V_F	-	2.78	2.80	V
CRI [3]	R_a	80	-	-	
Viewing Angle	$2\Theta_{1/2}$	-	120	-	Deg.
Thermal resistance (J to S) [4]	$R\theta_{J-S}$	-	10	-	℃/W
ESD Sensitivity(HBM)	-	Class 3A JESD22-A114-E			

Table 4. Absolute Maximum Ratings

Parameter	Symbol	Value	Unit
Forward Current	I_F	200	mA
Power Dissipation	P_D	0.62	W
Junction Temperature	T_j	125	ºC
Operating Temperature	T_{opr}	-40 ~ + 85	ºC
Storage Temperature	T_{stg}	-40 ~ + 100	ºC

Notes :

(1) Seoul Semiconductor maintains a tolerance of ±5% on Intensity and power measurements.

(2) Correlated Color Temperature is derived from the CIE 1931 Chromaticity diagram.

Color coordinate : ±0.005, CCT ±5% tolerance.

(3) Tolerance is ±2.0 on CRI measurements,± 0.1 on VF measurements.

(4) Thermal resistance is junction to Solder.

(5) I_{FP} conditions with pulse width ≤10ms and duty cycle ≤10%

(6) It is recommended to use it in the condition that the reliability is secured within the Max value.

- **Calculated performance values are for reference only.**
- **All measurements were made under the standardized environment of Seoul Semiconductor.**

Characteristics Graph

Fig 1. Color Spectrum, T_j = 25ºC, I_F=65mA

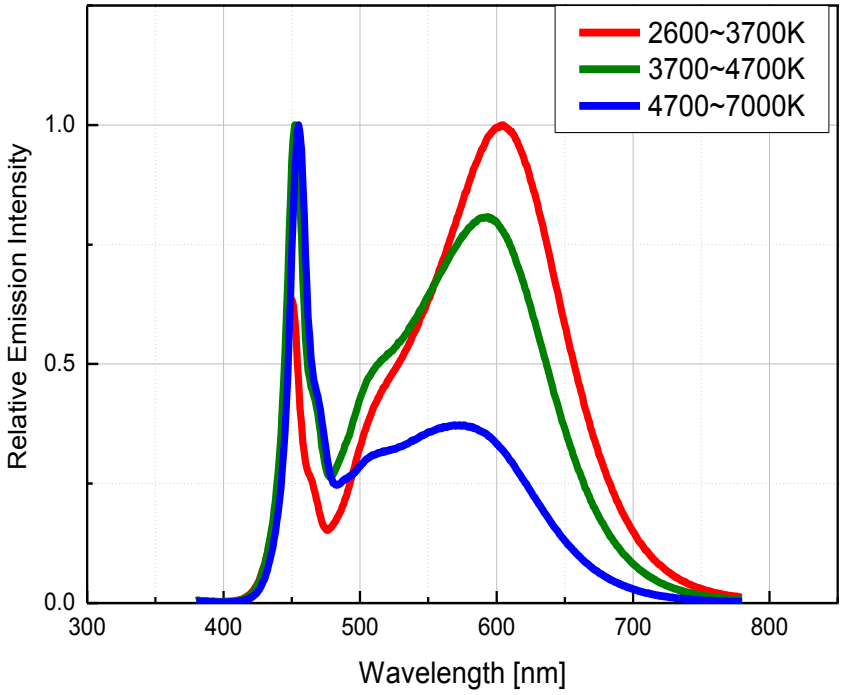

Fig 2. Radiant Pattern, T_j = 25ºC, I_F=65mA

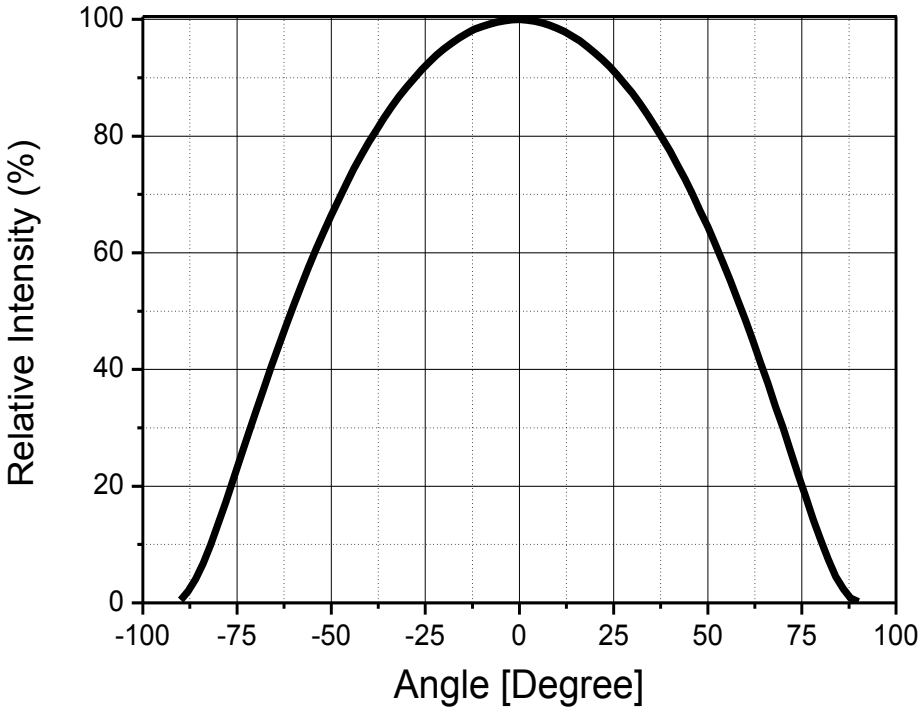

Characteristics Graph

Fig 3. Forward Voltage vs. Forward Current, T_j = 25ºC

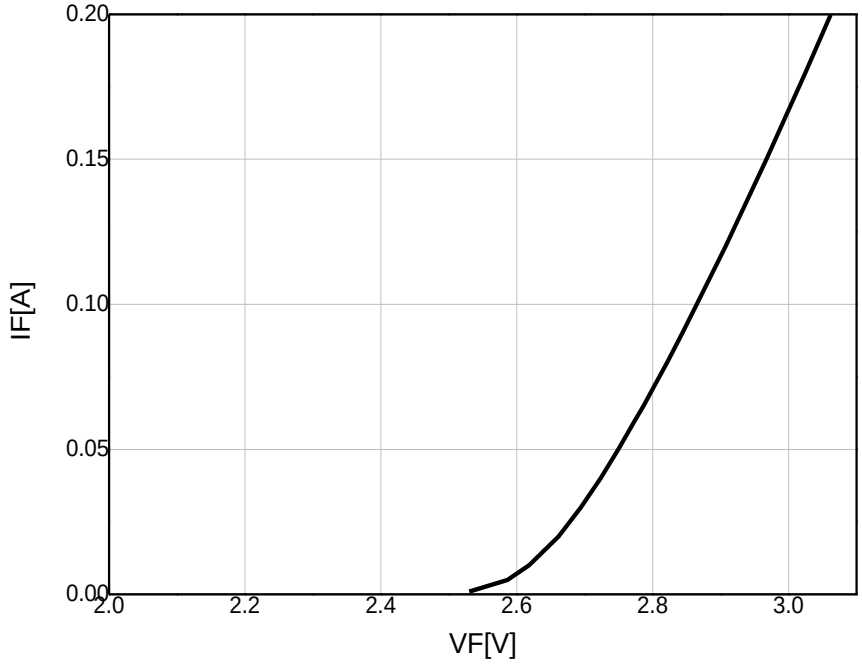

Fig 4. Forward Current vs. Relative Luminous Intensity, T_j = 25ºC

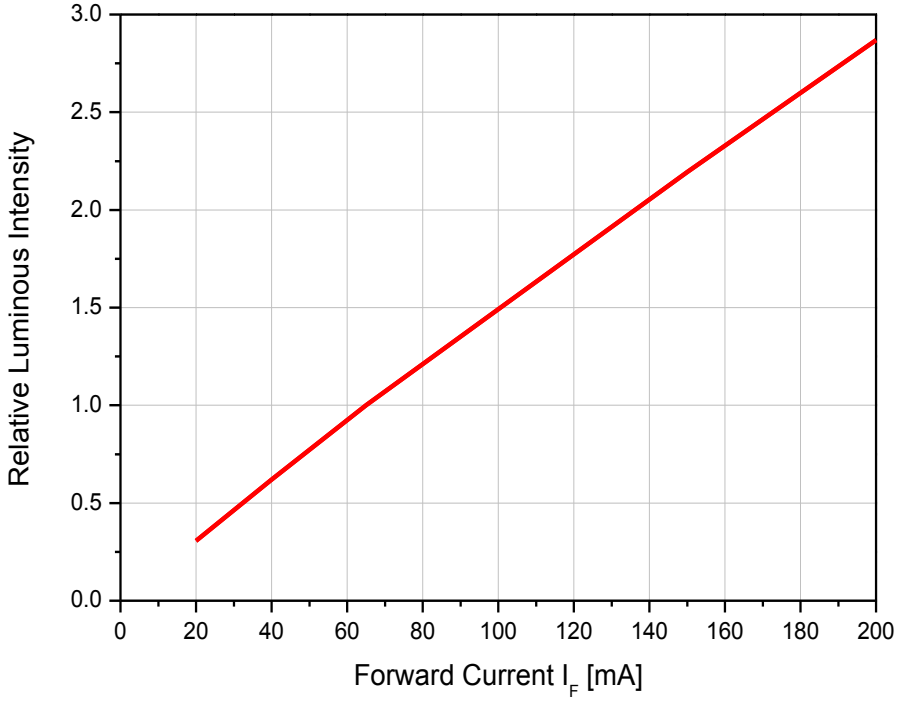

* Use of less than 5mA is not recommended

Characteristics Graph

Fig 5. Forward Current vs. CIE X,Y Shift, T_j = 25ºC

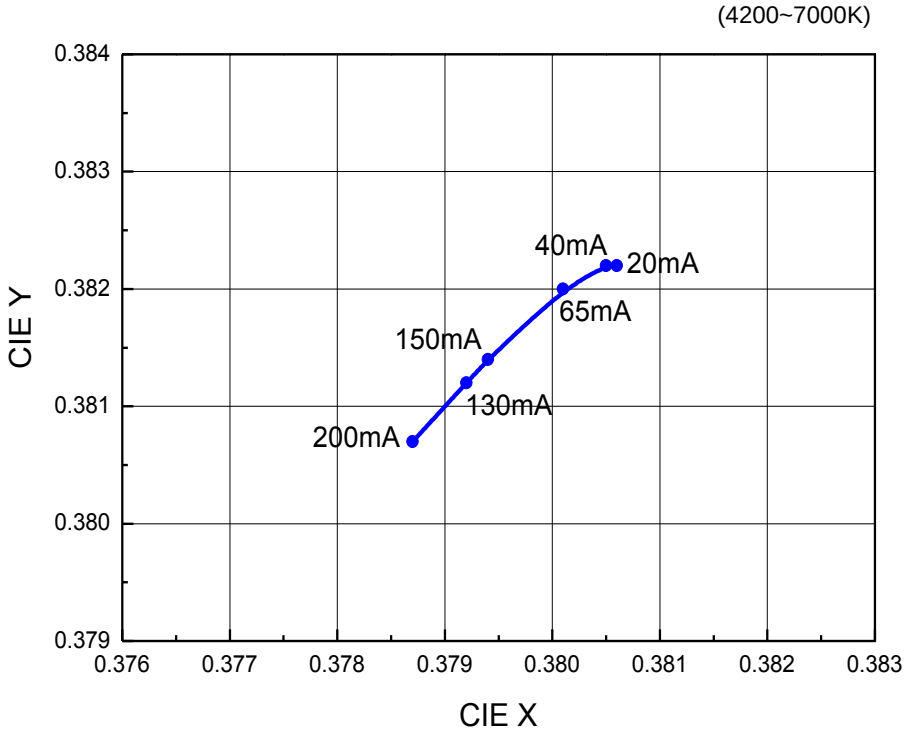

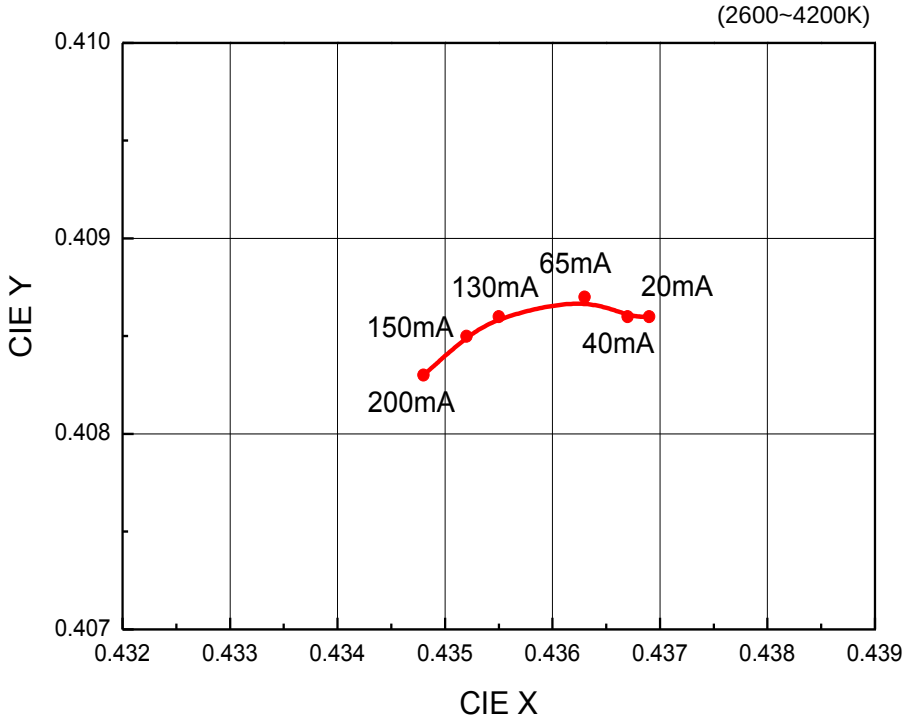

Characteristics Graph

Fig 6. Junction Temperature vs. Relative Luminous Intensity, I_F=65mA

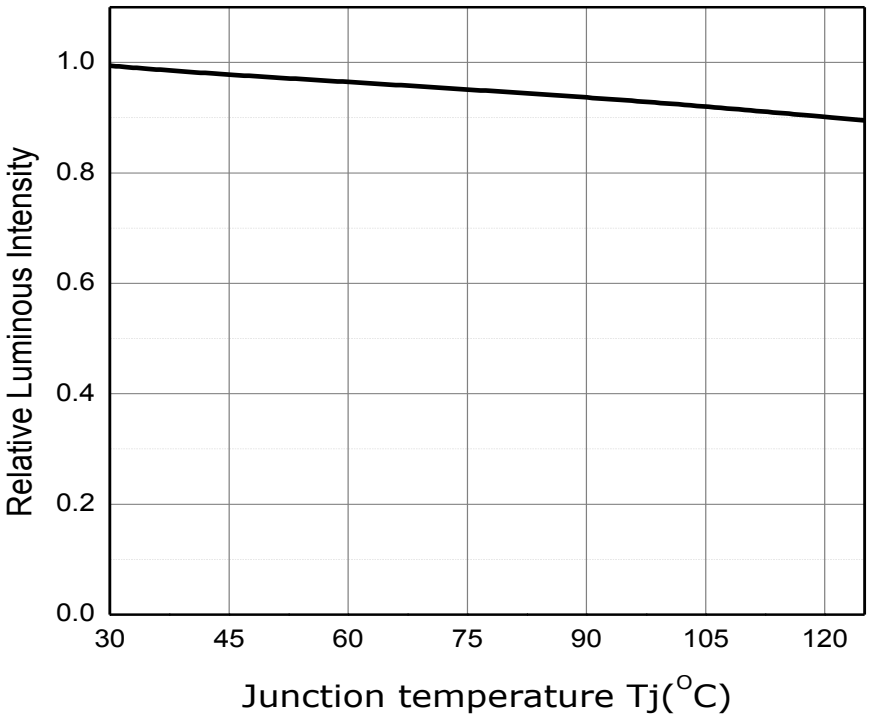

Fig 7. Junction Temperature vs. Relative Forward Voltage, I_F=65mA

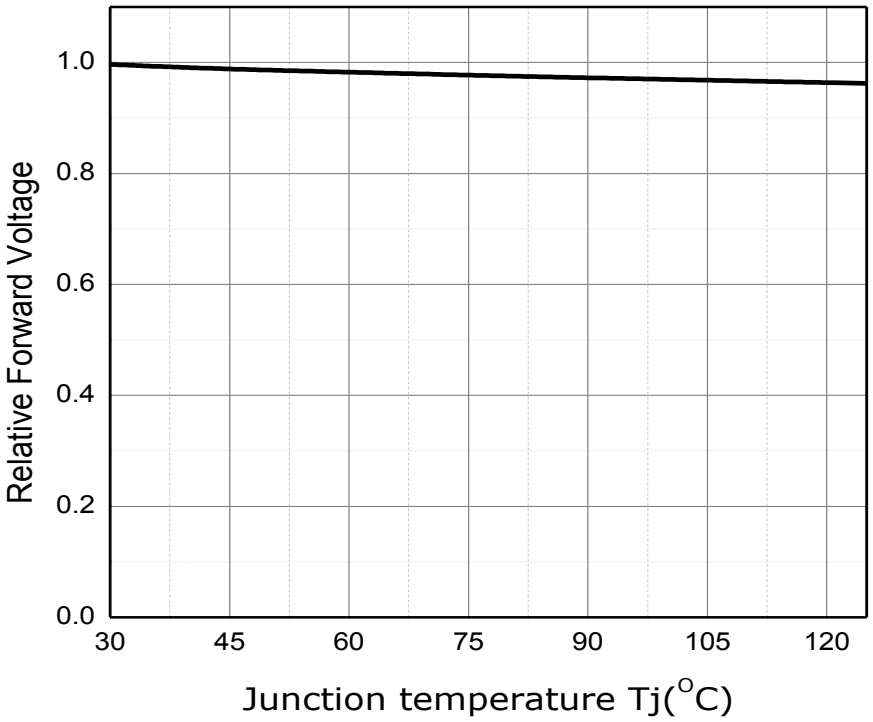

Characteristics Graph

Fig 8. Chromaticity Coordinate vs. Junction Temperature, I_F=65mA

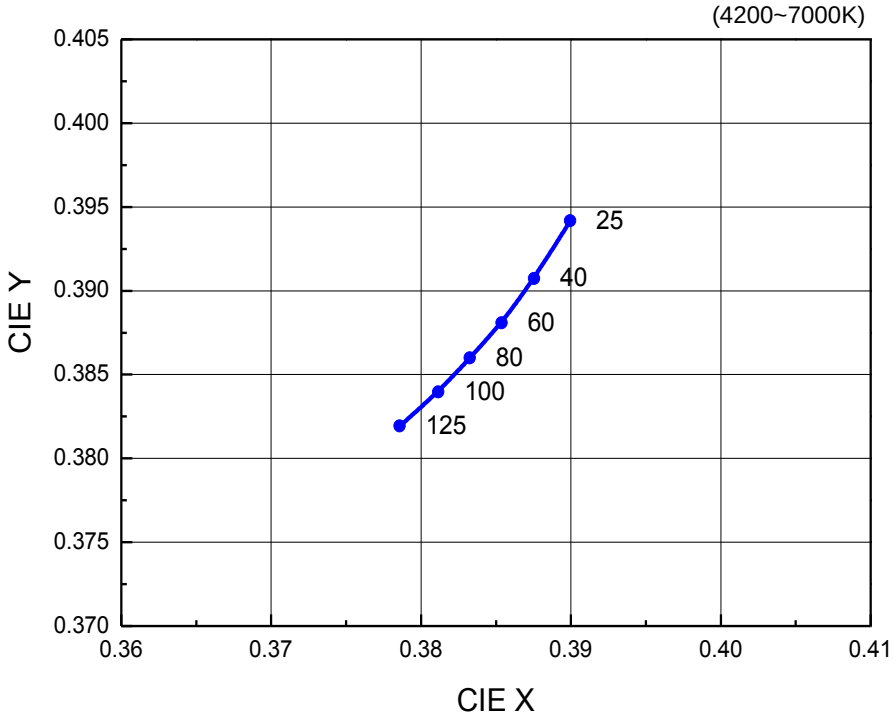

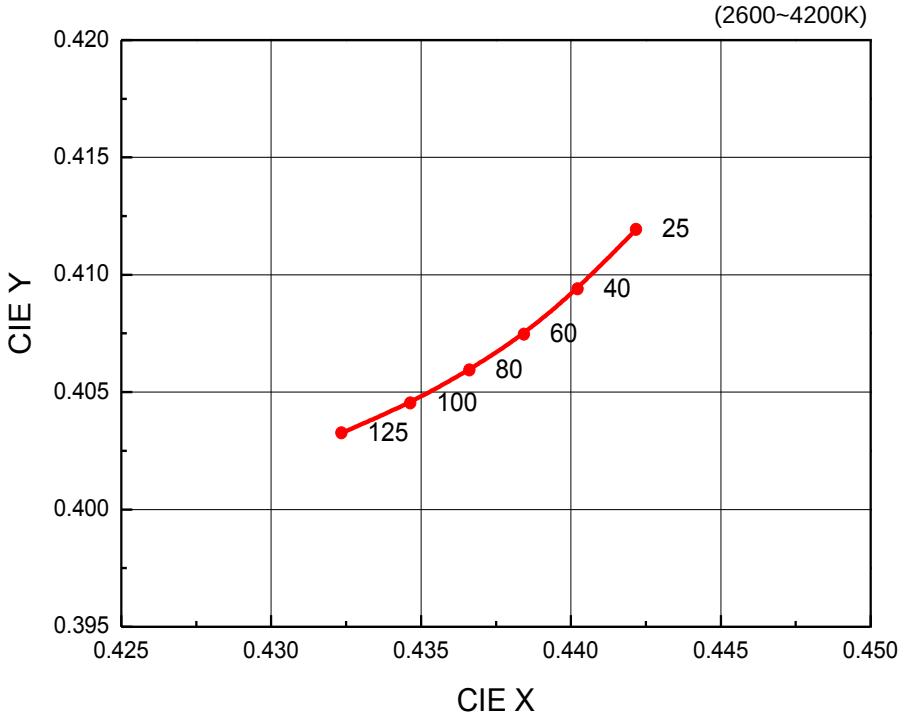

Characteristics Graph

Fig 9. Ambient Temperature vs. Maximum Forward Current, T_{j_max} = 125℃

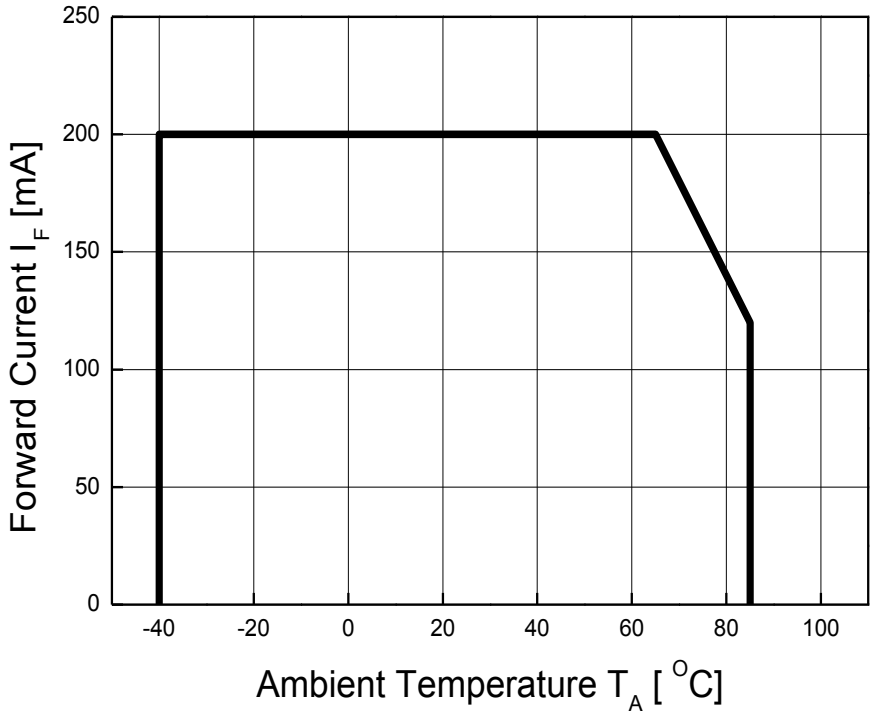

Performance Characteristics

Table 5. Bin Code description, T_j=25℃, I_F=65mA

Part Number	Luminous Intensity (@5000K) (lm)			Color Chromaticity Coordinate	Typical Forward Voltage (V)		
	Bin Code	Min.	Max.		Bin Code	Min.	Max.
S1W0-5630XX8003-00000000-00004	T5	33.5	35.0	Refer to Page. 12	Y1	2.7	2.8
	U0	35.0	36.0		Y2	2.8	2.9
	U3	36.0	37.3				
	U7	37.3	39.8				

Available ranks

Table 6. Intensity rank distribution

CCT	CIE	IV Rank			
6000 ~ 7000K	A	T5	U0	U3	U7
5300 – 6000K	B	T5	U0	U3	U7
4700 ~ 5300K	C	T5	U0	U3	U7
3700 ~ 4200K	E	T5	U0	U3	U7
3200 ~ 3700K	F	T5	U0	U3	U7
2900 ~ 3200K	G	T5	U0	U3	U7
2600 ~ 2900K	H	T5	U0	U3	U7

***Notes :**

(1) Calculated performance values are for reference only.

- **All measurements were made under the standardized environment of Seoul Semiconductor.**

  In order to ensure availability, single color rank will not be orderable.

Color Bin Structure

CIE Chromaticity Diagram (Cool white), T_j=25℃, I_F=65mA

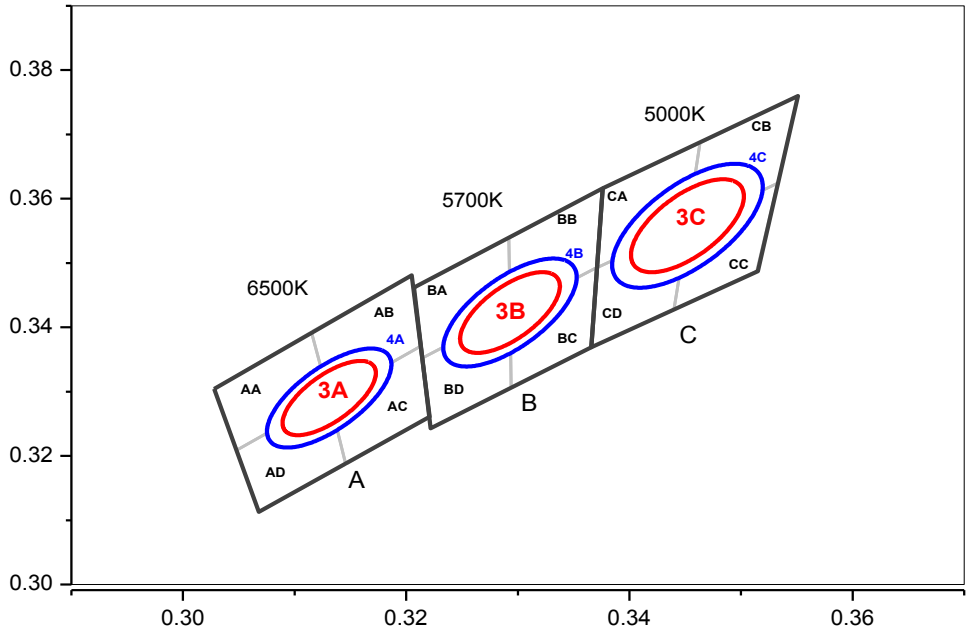

6500K 3Step

3A	
Center point	0.3123 : 0.3282
Major Axis a	0.0066
Minor Axis b	0.0027
Ellipse Rotation Angle	58

5700K 3Step

3B	
Center point	0.3287 : 0.3417
Major Axis a	0.0071
Minor Axis b	0.0030
Ellipse Rotation Angle	59

5000K 3Step

3C	
Center point	0.3447 : 0.3553
Major Axis a	0.0081
Minor Axis b	0.0035
Ellipse Rotation Angle	60

6500K 4Step

4A	
Center point	0.3131 : 0.3290
Major Axis a	0.0088
Minor Axis b	0.0036
Ellipse Rotation Angle	58

5700K 4Step

4B	
Center point	0.3293 : 0.3423
Major Axis a	0.0095
Minor Axis b	0.0040
Ellipse Rotation Angle	59

5000K 4Step

4C	
Center point	0.3452 : 0.3558
Major Axis a	0.0108
Minor Axis b	0.0047
Ellipse Rotation Angle	60

AA		AB		AC		AD	
CIE X	CIE Y	CIE X	CIE Y	CIE X	CIE Y	CIE X	CIE Y
0.3028	0.3304	0.3115	0.3393	0.3131	0.329	0.3048	0.3209
0.3048	0.3209	0.3131	0.329	0.3146	0.3187	0.3068	0.3113
0.3131	0.329	0.3213	0.3371	0.3221	0.3261	0.3146	0.3187
0.3115	0.3393	0.3205	0.3481	0.3213	0.3371	0.3131	0.329

BA		BB		BC		BD	
CIE X	CIE Y	CIE X	CIE Y	CIE X	CIE Y	CIE X	CIE Y
0.3207	0.3462	0.3292	0.3539	0.3293	0.3423	0.3215	0.3353
0.3215	0.3353	0.3293	0.3423	0.3294	0.3306	0.3222	0.3243
0.3293	0.3423	0.3371	0.3493	0.3366	0.3369	0.3294	0.3306
0.3292	0.3539	0.3376	0.3616	0.3371	0.3493	0.3293	0.3423

CA		CB		CC		CD	
CIE X	CIE Y	CIE X	CIE Y	CIE X	CIE Y	CIE X	CIE Y
0.3376	0.3616	0.3463	0.3687	0.3452	0.3558	0.3371	0.3493
0.3371	0.3493	0.3452	0.3558	0.344	0.3428	0.3366	0.3369
0.3452	0.3558	0.3533	0.3624	0.3514	0.3487	0.344	0.3428
0.3463	0.3687	0.3551	0.376	0.3533	0.3624	0.3452	0.3558

Color Bin Structure

CIE Chromaticity Diagram (Neutral white), T_j=25℃, I_F=65mA

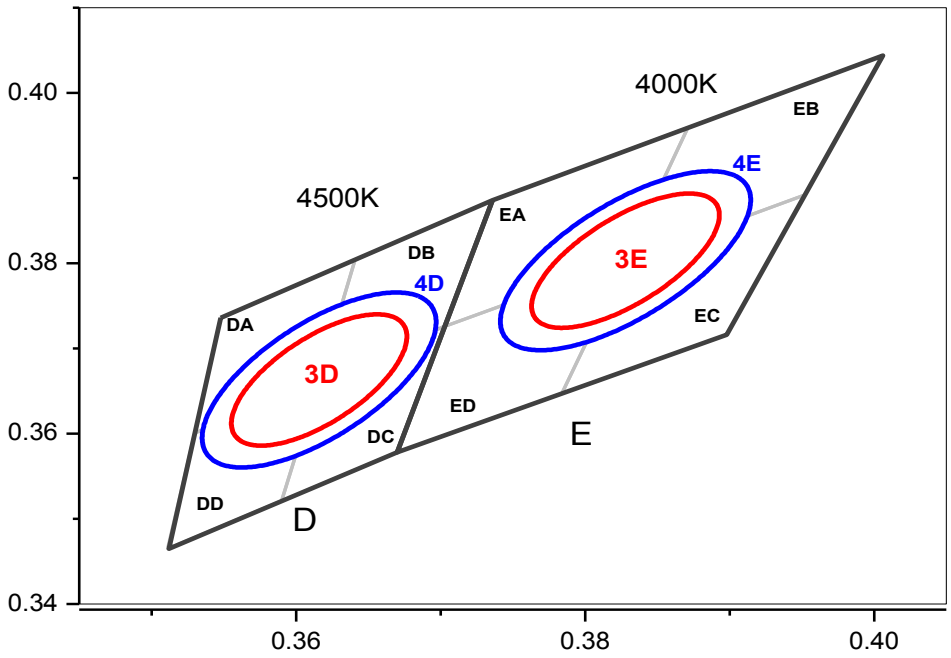

4500K 3Step

3D	
Center point	0.3611 : 0.3658
Major Axis a	0.0090
Minor Axis b	0.0039
Ellipse Rotation Angle	55

4000K 3Step

3E	
Center point	0.3818 : 0.3797
Major Axis a	0.0094
Minor Axis b	0.0040
Ellipse Rotation Angle	53

4500K 4Step

4D	
Center point	0.3611 : 0.3658
Major Axis a	0.0120
Minor Axis b	0.0052
Ellipse Rotation Angle	55

4000K 4Step

4E	
Center point	0.3818 : 0.3797
Major Axis a	0.0125
Minor Axis b	0.0053
Ellipse Rotation Angle	53

DA		DB		DC		DD	
CIE X	CIE Y	CIE X	CIE Y	CIE X	CIE Y	CIE X	CIE Y
0.3548	0.3736	0.3641	0.3804	0.3616	0.3663	0.353	0.3601
0.353	0.3601	0.3616	0.3663	0.359	0.3521	0.3511	0.3465
0.3616	0.3663	0.3703	0.3726	0.367	0.3578	0.359	0.3521
0.3641	0.3804	0.3736	0.3874	0.3703	0.3726	0.3616	0.3663
EA		**EB**		**EC**		**ED**	
CIE X	CIE Y	CIE X	CIE Y	CIE X	CIE Y	CIE X	CIE Y
0.3736	0.3874	0.3871	0.3959	0.3828	0.3803	0.3703	0.3726
0.3703	0.3726	0.3828	0.3803	0.3784	0.3647	0.367	0.3578
0.3828	0.3803	0.3952	0.388	0.3898	0.3716	0.3784	0.3647
0.3871	0.3959	0.4006	0.4044	0.3952	0.388	0.3828	0.3803

Color Bin Structure

CIE Chromaticity Diagram (Warm white), T_j=25℃, I_F=65mA

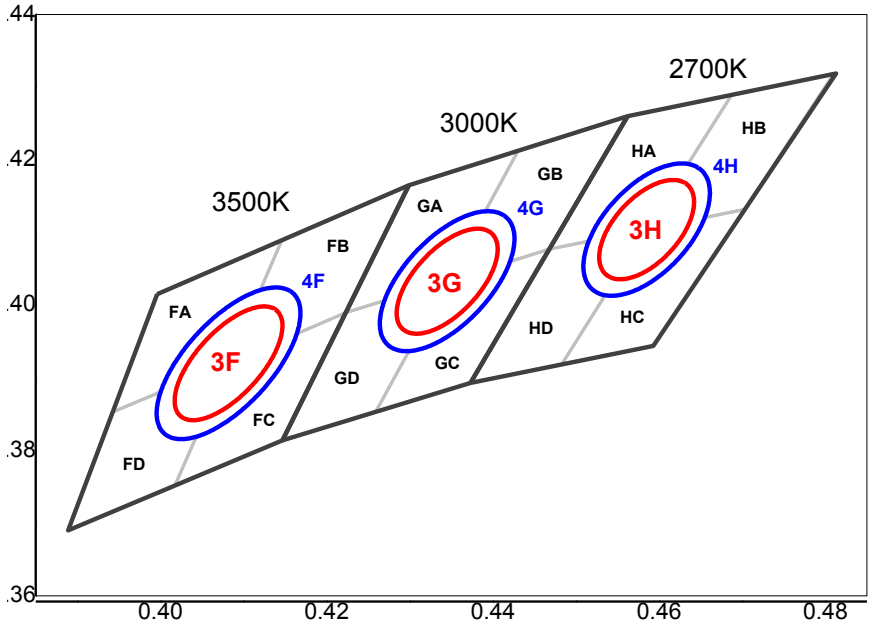

3500K 3Step

3 Step	
Center point	0.4073 : 0.3917
Major Axis a	0.0093
Minor Axis b	0.0041
Ellipse Rotation Angle	53

3000K 3Step

3 Step	
Center point	0.4338 : 0.4030
Major Axis a	0.0085
Minor Axis b	0.0041
Ellipse Rotation Angle	53

2700K 3Step

3 Step	
Center point	0.4578 : 0.4101
Major Axis a	0.0079
Minor Axis b	0.0041
Ellipse Rotation Angle	54

3500K 4Step

4 Step	
Center point	0.4082 : 0.3920
Major Axis a	0.0124
Minor Axis b	0.0055
Ellipse Rotation Angle	53

3000K 4Step

4 Step	
Center point	0.4345 : 0.4033
Major Axis a	0.0113
Minor Axis b	0.0055
Ellipse Rotation Angle	53

2700K 4Step

4 Step	
Center point	0.4585 : 0.4104
Major Axis a	0.0105
Minor Axis b	0.0055
Ellipse Rotation Angle	54

FA		FB		FC		FD	
CIE X	CIE Y	CIE X	CIE Y	CIE X	CIE Y	CIE X	CIE Y
0.3996	0.4015	0.4146	0.4089	0.4082	0.392	0.3943	0.3853
0.3943	0.3853	0.4082	0.392	0.4017	0.3751	0.3889	0.369
0.4082	0.392	0.4223	0.399	0.4147	0.3814	0.4017	0.3751
0.4146	0.4089	0.4299	0.4165	0.4223	0.399	0.4082	0.392

GA		GB		GC		GD	
CIE X	CIE Y	CIE X	CIE Y	CIE X	CIE Y	CIE X	CIE Y
0.4299	0.4165	0.443	0.4212	0.4345	0.4033	0.4223	0.399
0.4223	0.399	0.4345	0.4033	0.4259	0.3853	0.4147	0.3814
0.4345	0.4033	0.4468	0.4077	0.4373	0.3893	0.4259	0.3853
0.443	0.4212	0.4562	0.426	0.4468	0.4077	0.4345	0.4033

HA		HB		HC		HD	
CIE X	CIE Y	CIE X	CIE Y	CIE X	CIE Y	CIE X	CIE Y
0.4562	0.426	0.4687	0.4289	0.4585	0.4104	0.4468	0.4077
0.4468	0.4077	0.4585	0.4104	0.4483	0.3919	0.4373	0.3893
0.4585	0.4104	0.4703	0.4132	0.4593	0.3944	0.4483	0.3919
0.4687	0.4289	0.481	0.4319	0.4703	0.4132	0.4585	0.4104

Mechanical Dimensions

Top View

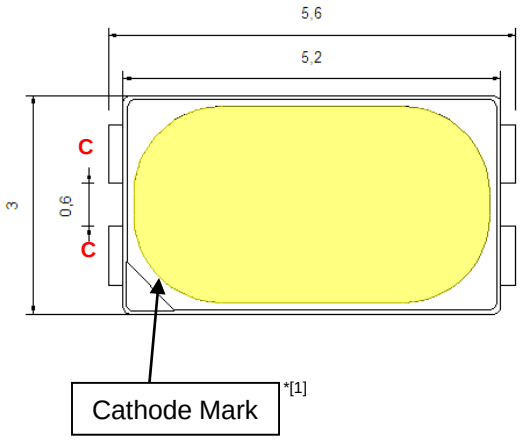

Bottom View

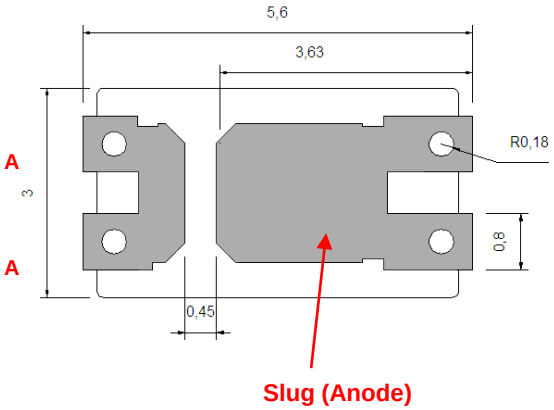

Side View

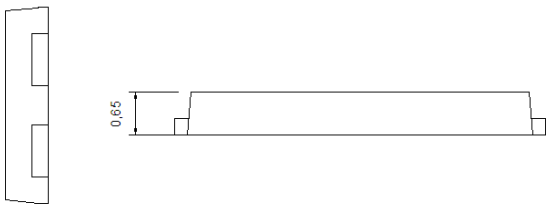

Circuit

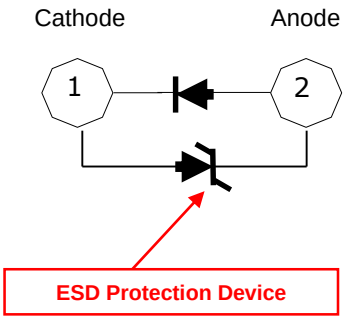

Notes :

(1) All dimensions are in millimeters.
(2) Scale : none
(3) Undefined tolerance is ±0.2mm

Recommended Solder Pad

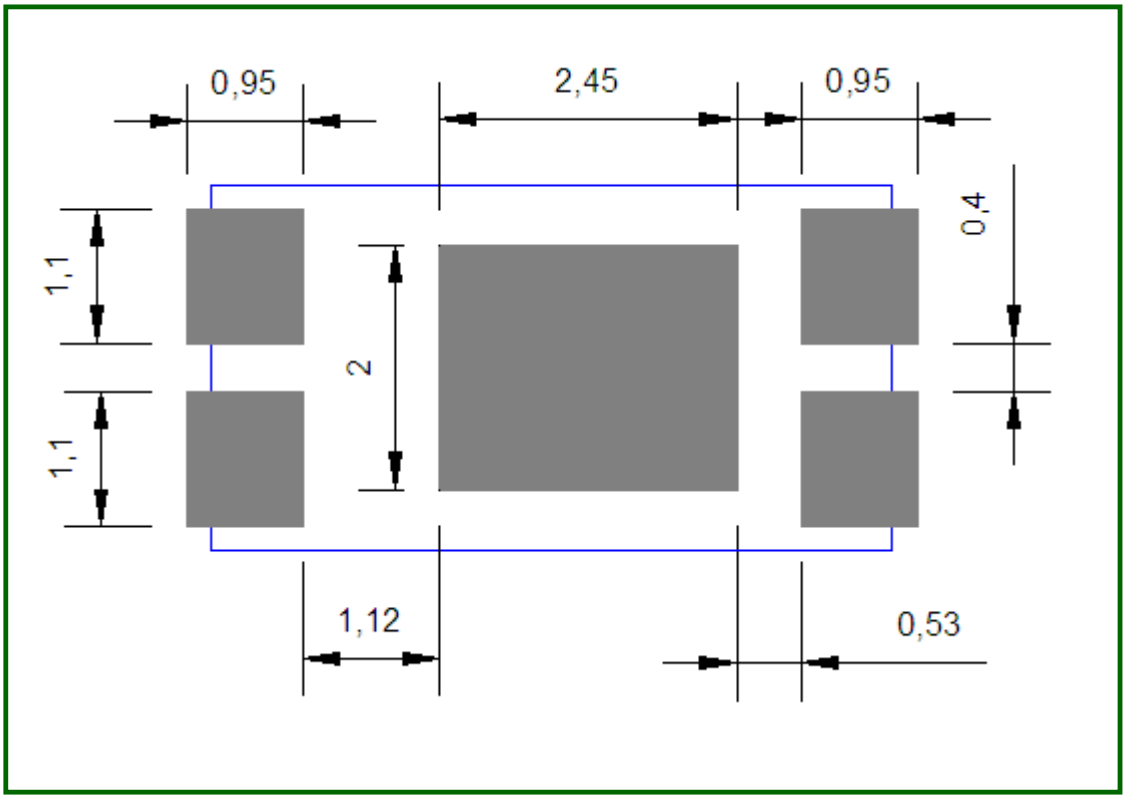

Notes :

(1) All dimensions are in millimeters.
(2) Scale : none
(3) This drawing without tolerances are for reference only
(4) Undefined tolerance is ±0.1mm
(5) The appearance and specifications of the product may be changed for improvement without notice.

Reflow Soldering Characteristics

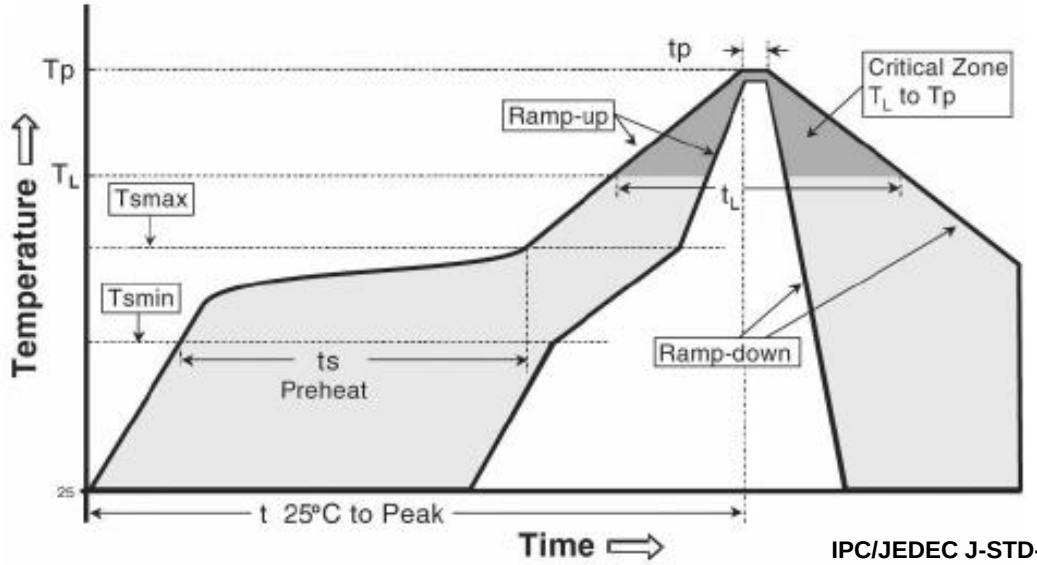

IPC/JEDEC J-STD-020

Profile Feature	Sn-Pb Eutectic Assembly	Pb-Free Assembly
Average ramp-up rate (T_{s_max} to T_p)	3° C/second max.	3° C/second max.
Preheat - Temperature Min (T_{s_min}) - Temperature Max (T_{s_max}) - Time (T_{s_min} to T_{s_max}) (t_s)	 100 °C 150 °C 60-120 seconds	 150 °C 200 °C 60-180 seconds
Time maintained above: - Temperature (T_L) - Time (t_L)	 183 °C 60-150 seconds	 217 °C 60-150 seconds
Peak Temperature (T_p)	215℃	260℃
Time within 5°C of actual Peak Temperature (t_p)2	10-30 seconds	20-40 seconds
Ramp-down Rate	6 °C/second max.	6 °C/second max.
Time 25°C to Peak Temperature	6 minutes max.	8 minutes max.

Caution :

(1) Reflow soldering is recommended not to be done more than two times
In the case of more than 24 hours passed soldering after first, LEDs will be damaged.
(2) Repairs should not be done after the LEDs have been soldered
When repair is unavoidable, suitable tools must be used.
(3) Die slug is to be soldered.
(4) When soldering, do not put stress on the LEDs during heating.
(5) After soldering, do not warp the circuit board.

Emitter Tape & Reel Packaging

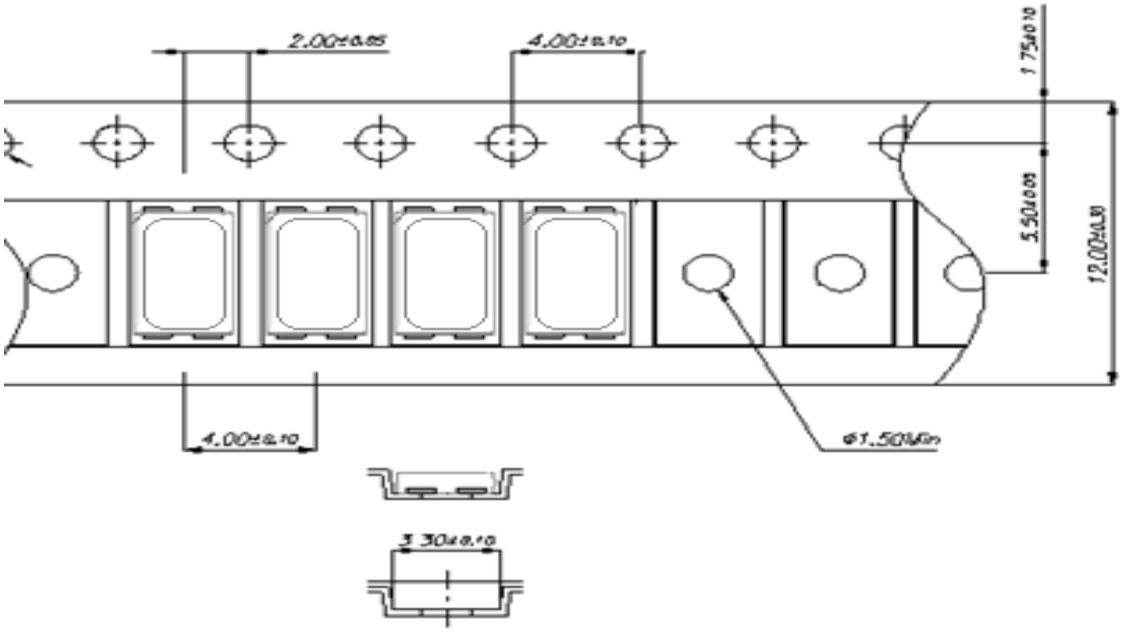

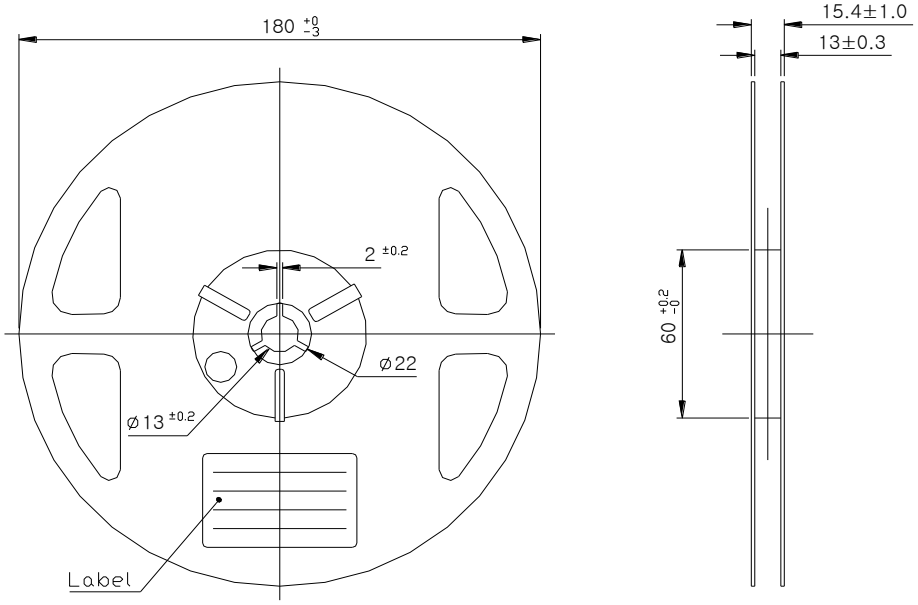

(Tolerance: ±0.2, Unit: mm)

Notes :

(1) Quantity : Max 4,500pcs/Reel
(2) Cumulative Tolerance : Cumulative Tolerance/10 pitches to be ±0.2mm
(3) Adhesion Strength of Cover Tape
Adhesion strength to be 0.1-0.7N when the cover tape is turned off from the carrier tape at the angle of 10˚ to the carrier tape.
(4) Package : P/N, Manufacturing data Code No. and Quantity to be indicated on a damp proof Package.

Emitter Tape & Reel Packaging

Reel

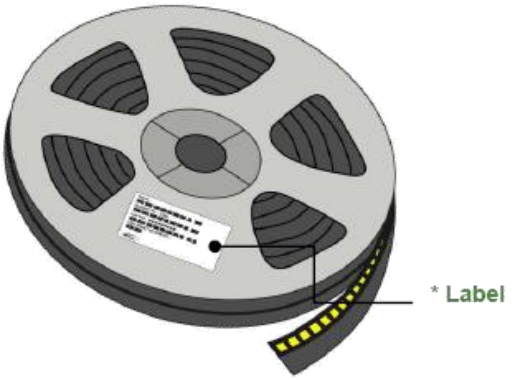

Aluminum Bag

Outer Box

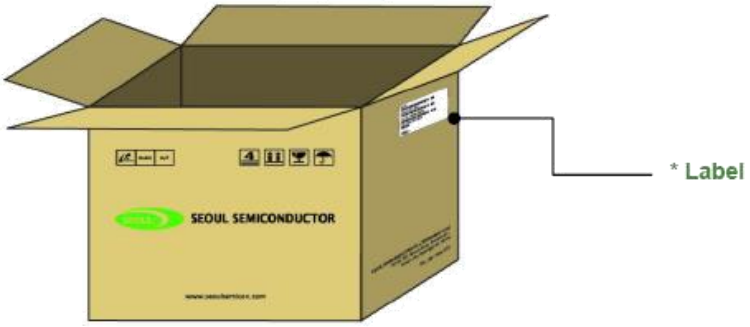

Product Nomenclature

Table 7. Part Numbering System :

Part Number Code	Description	Part Number	Value
X_1	Company	S	Seoul Semiconductor
X_2	Level of Integration	1	Discrete LED
X_3X_4	Technology	W0	General White
$X_5X_6X_7X_8$	Dimension	5630	
X_9X_{10}	CCT	XX	
$X_{11}X_{12}$	CRI	80	
$X_{13}X_{14}$	Vf	03	
$X_{15}X_{16}X_{17}$	Characteristic code Flux Rank	000	
$X_{18}X_{19}X_{20}$	Characteristic code Vf Rank	000	
$X_{21}X_{22}$	Characteristic code Color Step	00	
$X_{23}X_{24}$	Type	00	
$X_{25}X_{26}X_{27}$	Internal code	004	

Handling of Silicone Resin for LEDs

(1) During processing, mechanical stress on the surface should be minimized as much as possible. Sharp objects of all types should not be used to pierce the sealing compound.

(2) In general, LEDs should only be handled from the side. By the way, this also applies to LEDs without a silicone sealant, since the surface can also become scratched.

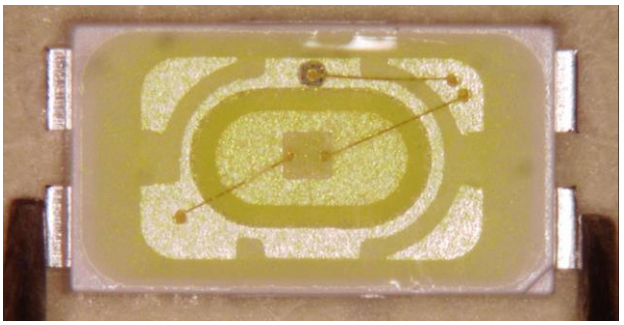

(3) When populating boards in SMT production, there are basically no restrictions regarding the form of the pick and place nozzle, except that mechanical pressure on the surface of the resin must be prevented. This is assured by choosing a pick and place nozzle which is larger than the LED's reflector area.

(4) Silicone differs from materials conventionally used for the manufacturing of LEDs. These conditions must be considered during the handling of such devices. Compared to standard encapsulants, silicone is generally softer, and the surface is more likely to attract dust.

As mentioned previously, the increased sensitivity to dust requires special care during processing. In cases where a minimal level of dirt and dust particles cannot be guaranteed, a suitable cleaning solution must be applied to the surface after the soldering of components.

(5) SSC suggests using isopropyl alcohol for cleaning. In case other solvents are used, it must be assured that these solvents do not dissolve the package or resin.
Ultrasonic cleaning is not recommended. Ultrasonic cleaning may cause damage to the LED.

(6) Please do not mold this product into another resin (epoxy, urethane, etc) and do not handle this. product with acid or sulfur material in sealed space.

Precaution for Use

(1) Storage

To avoid the moisture penetration, we recommend store in a dry box with a desiccant.
The recommended storage temperature range is 5℃ to 30℃ and a maximum humidity of RH50%.

(2) Use Precaution after Opening the Packaging

Use SMT techniques properly when you solder the LED as separation of the lens may affect the light output efficiency.
Pay attention to the following:

a. Recommend conditions after opening the package
- Sealing
- Temperature : 5 ~ 30℃ Humidity : less than RH60%

b. If the package has been opened more than 4 week(MSL_2a) or the color of the desiccant changes, components should be dried for 10-24hr at 65±5℃

(3) Do not apply mechanical force or excess vibration during the cooling process to normal temperature after soldering.

(4) Do not rapidly cool device after soldering.

(5) Components should not be mounted on warped (non coplanar) portion of PCB.

(6) Radioactive exposure is not considered for the products listed here in.

(7) Gallium arsenide is used in some of the products listed in this publication.
These products are dangerous if they are burned or shredded in the process of disposal.
It is also dangerous to drink the liquid or inhale the gas generated by such products when chemically disposed of.

(8) This device should not be used in any type of fluid such as water, oil, organic solvent and etc.
When washing is required, IPA (Isopropyl Alcohol) should be used.

(9) When the LEDs are in operation the maximum current should be decided after measuring the package temperature.

(10) Don’t recommend to use it for cold storage lighting .

Precaution for Use

(11) The appearance and specifications of the product may be modified for improvement without notice.

(12) Long time exposure of sunlight or occasional UV exposure will cause lens discoloration.

(13) VOCs (Volatile organic compounds) emitted from materials used in the construction of fixtures can penetrate silicone encapsulants of LEDs and discolor when exposed to heat and photonic energy. The result can be a significant loss of light output from the fixture. Knowledge of the properties of the materials selected to be used in the construction of fixtures can help prevent these issues.

(14) Attaching LEDs, do not use adhesives that outgas organic vapor.

(15) The driving circuit must be designed to allow forward voltage only when it is ON or OFF.
If the reverse voltage is applied to LED, migration can be generated resulting in LED damage.

(16) Similar to most Solid state devices;
LEDs are sensitive to Electro-Static Discharge (ESD) and Electrical Over Stress (EOS).
Below is a list of suggestions that Seoul Semiconductor purposes to minimize these effects.

a. ESD (Electro Static Discharge)

Electrostatic discharge (ESD) is the defined as the release of static electricity when two objects come into contact. While most ESD events are considered harmless, it can be an expensive problem in many industrial environments during production and storage. The damage from ESD to an LEDs may cause the product to demonstrate unusual characteristics such as:

- Increase in reverse leakage current lowered turn-on voltage
- Abnormal emissions from the LED at low current

The following recommendations are suggested to help minimize the potential for an ESD event.
One or more recommended work area suggestions:

- Ionizing fan setup
- ESD table/shelf mat made of conductive materials
- ESD safe storage containers

One or more personnel suggestion options:
- Antistatic wrist-strap
- Antistatic material shoes
- Antistatic clothes

Environmental controls:
- Humidity control (ESD gets worse in a dry environment)

Precaution for Use

b. EOS (Electrical Over Stress)

Electrical Over-Stress (EOS) is defined as damage that may occur when an electronic device is subjected to a current or voltage that is beyond the maximum specification limits of the device.
The effects from an EOS event can be noticed through product performance like:

- Changes to the performance of the LED package
  (If the damage is around the bond pad area and since the package is completely encapsulated the package may turn on but flicker show severe performance degradation.)
- Changes to the light output of the luminaire from component failure
- Components on the board not operating at determined drive power

Failure of performance from entire fixture due to changes in circuit voltage and current across total circuit causing trickle down failures. It is impossible to predict the failure mode of every LED exposed to electrical overstress as the failure modes have been investigated to vary, but there are some common signs that will indicate an EOS event has occurred:

- Damaged may be noticed to the bond wires (appearing similar to a blown fuse)
- Damage to the bond pads located on the emission surface of the LED package
  (shadowing can be noticed around the bond pads while viewing through a microscope)
- Anomalies noticed in the encapsulation and phosphor around the bond wires.
- This damage usually appears due to the thermal stress produced during the EOS event.

c. To help minimize the damage from an EOS event Seoul Semiconductor recommends utilizing:

- A surge protection circuit
- An appropriately rated over voltage protection device
- A current limiting device

Company Information

Published by

Seoul Semiconductor © 2013 All Rights Reserved.

Company Information

Seoul Semiconductor (www.SeoulSemicon.com) manufacturers and packages a wide selection of light emitting diodes (LEDs) for the automotive, general illumination/lighting, Home appliance, signage and back lighting markets. The company is the world's fifth largest LED supplier, holding more than 10,000 patents globally, while offering a wide range of LED technology and production capacity in areas such as "nPola", "Acrich", the world's first commercially produced AC LED, and "Acrich MJT - Multi-Junction Technology" a proprietary family of high-voltage LEDs.

The company's broad product portfolio includes a wide array of package and device choices such as Acrich and Acirch2, high-brightness LEDs, mid-power LEDs, side-view LEDs, and through-hole type LEDs as well as custom modules, displays, and sensors.

Legal Disclaimer

Information in this document is provided in connection with Seoul Semiconductor products. With respect to any examples or hints given herein, any typical values stated herein and/or any information regarding the application of the device, Seoul Semiconductor hereby disclaims any and all warranties and liabilities of any kind, including without limitation, warranties of non-infringement of intellectual property rights of any third party. The appearance and specifications of the product can be changed to improve the quality and/or performance without notice.